QP21-1563

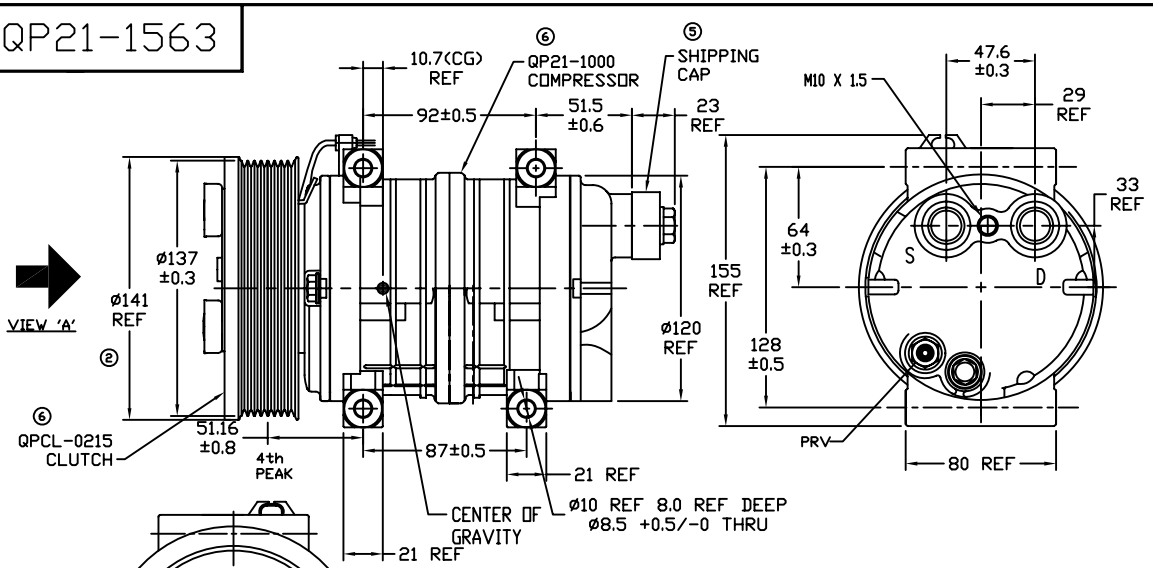

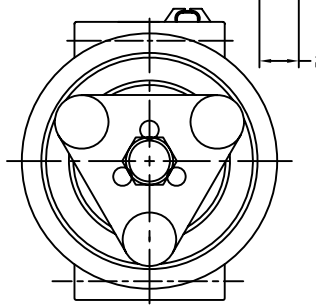

VIEW 'A'

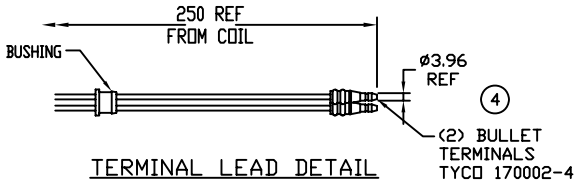

TERMINAL LEAD DETAIL

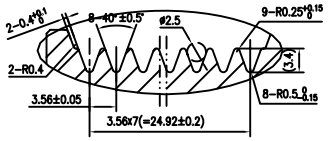

CLUTCH SPECIFICATIONS

1) VOLTAGE.....24 VDC
2) BELT.....PV8
3) STATIC TORQUE
   INITIAL.....40 Nm
   AFTER BURNISHING.....59 Nm ③
4) MAX POWER CONSUMPTION.....45W @ 25°C
5) WEIGHT.....3.1 Kg

COMPRESSOR SPECIFICATIONS

1) MODEL.....QP21
2) NUMBER OF CYLINDERS.....10
3) BORE x STROKE.....ø32 x 26.7
4) DISPLACEMENT.....214.7 cm3
5) SPEED RANGE.....700-6000 RPM
6) ROTATION DIRECTION.....CW or CCW
7) REFERIGERANT.....R-134a
⑱ 8) LUBRICANT.....PAG 46 180cc
9) WEIGHT.....5.1 Kg

REVISIONS

CHG	EO#	DESCRIPTION	DATE	BY	CK
1A	CR	REDRAWN, NO CHANGE	08/13/08	GLB	
1B	Q08023	PAG 46 WAS PAG 100	08/13/08		
2	ENG	ADDED ø141 REF TO CLUTCH	05/12/09		
3	Q09029	ADDED CLUTCH TORQUE & WATTS	07/06/09		
4	Q09033	ADDED 170002-4 (3.96)	09/24/09		
5	ENG	ADDED SHIPPING CAP	10/02/09		
6	ENG	ADDED PART NO'S	11/17/09	GLB	

NOTICE

QUE PRODUCTS, LLC CLAIMS PROPRIETARY RIGHTS IN THE MATERIAL DISCLOSED HEREON. THIS DRAWING IS ISSUED FOR ENGINEERING INFORMATION ONLY. IT MAY NOT BE REPRODUCED, NOR MAY THE INFORMATION HEREON BE USED FOR MFG. PURPOSES WITHOUT WRITTEN PERMISSION FROM QUE PRODUCTS, LLC

UNLESS OTHERWISE SPECIFIED:
X.XX=± - X.XXX=± - <=± -
DRAFT= - PER SIDE WALL= - RADII= -
DIMENSION LIMITS TO BE HELD AFTER PLATING OR CONVERSION COATING
DIMENSIONS PER ANSI Y14.5
SURFACE FINISH PER ANSI Y14.36

CUSTOMER NAME PART NO - REV
—

QUE PRODUCTS, LLC

ALL CHANGES TO BE MADE ON CAD SYSTEM

DRAWN	DATE	EWR-ECR	CHECKED	DATE
GLB	07/18/2007	—		

MATERIAL AND HEAT TREAT: —
FINISH: —

TITLE
H-PAD 24V PV8 GRV 137mm

FILE SIZE A | EXPERIMENTAL DWG NO | RELEASED DWG NO QP21-1563

SCALE: / = 1.00 | DO NOT SCALE DRAWING | SHEET 1 OF 1

BLUE DOT = EXPERIMENTAL DRAWING
RED DOT = CONTROLLED COPY
BLACK DOT = UNCONTROLLED COPY